LCM-60DA Series

60W Multiple-Stage Output Current LED Power Supply

Case: 8911BQ
123.5 x 81.5 x 23 mm

Features

- Output current level selectable by DIP S.W.
- 180~295VAC input only
- Built-in active PFC function
- Protections: Short circuit / Over voltage / Over temperature
- Cooling by free air convection
- Fully isolated plastic case
- Class II power unit, no FG
- Built-in 0~10Vdc and PWM signal dimming function
- Logarithm or linear dimming curve selectable (meet IEC62386-207)
- Temperature compensation function by external NTC
- No load power consumption <0.5W(Note.7)
- Power supplies synchronization function up to 10 units
- Suitable for indoor LED lighting applications
- 3 years warranty

Specification

INPUT	Voltage	180V ~ 295VAC 254 ~ 417VDC					
	Frequency	47 ~ 63 Hz					
	Power Factor	PF ≧ 0.975/230VAC, PF ≧ 0.96/277VAC at rated power (Please refer to "Power Factor Characteristic" curve)					
	Total Harmonic Distortion	Total harmonic distortion will be lower than 20% when output loading is 75% or higher					
	Efficiency	92%					
	AC Current (Typ.)	0.32A/230VAC 0.27A/277VAC					
	Inrush Current (typ.)	Cold start 20A(twidth=270μs measured at 50% Ipeak) at 230VAC					
	Leakage Current	<0.5mA / 240VAC					
OUTPUT	Selectable Current	500mA	600mA	700mA	900mA	1050mA	1400mA
	DC Voltage Range	2 ~ 90V	2 ~ 90V	2 ~ 86V	2 ~ 67V	2 ~ 57V	2 ~ 42V
	Rated Power	60.3W					
	Ripple Current	±5.0%					
	No Load Output Voltage	95V			73V		
	Ripple & Noise	700mVp-p					
	Current Accuracy	±5.0%					
	Set Up, Rise Time	500ms, 80ms/230VAC at rated power					
	Hold Up Time	16ms/230VAC at rated power					
PROTECTION	Short Circuit	Constant current limiting, recovers automatically after fault condition is removed					
	Over Voltage	105 ~ 125V Protection type: Shutdown o/p voltage, re-power on to recover					
	Over Temperature	Shut down o/p voltage, re-power on to recover					
FUNCTION	Temp. Compensation	By external NTC (not provided with power supply), please see "Temperature Compensation Operation"					
	Dimming	Please see "Dimming Operation"					
	Synchronisation	Please see "Synchronisation Operation"					
ENVIRONMENT	Working Temperature	-30 ~ +60°C (Refer to Derating Curve)					
	Working Humidity	20 ~ 90% RH non-condensing					
	Storage Temperature	-40 ~ +80C, 10 ~ 95% RH					
	Temp. Coefficient	±0.03%/°C (0-50°C)					
	Vibration	10 ~ 500Hz, 2G 10 min./1cycle, period for 60min. each long X, Y, Z axes					
SAFETY & EMC	Safety Standards	UL8750, ENEC EN61347-1, EN61347-2-13, EN62384 independent approved					
	DALI Standards	Comply with IEC62386-101, 102, 207					
	Withstand Voltage	I/P-O/P:3.75KVAC					
	Isolation Resistance	I/P-O/P:>100M Ohms / 500VDC / 25°C / 70% RH					
	EMC Emission	Compliance to EN55015, EN61000-3-2 Class C(≧40% rated power) ; EN61000-3-3					
	EMC Immunity	Compliance to EN61000-4-2,3,4,5,6,8,11, EN55024, EN61547 light industry level (surge 2KV), criteria A					
OTHERS	MTBF	193.6K hrs min. MIL-HDBK-217F (25°C)					
	Packing	0.24kg; 54pcs/15Kg/1.12CUFT					

1. All parameters NOT specially mentioned are measured at 230VAC input, rated load and 25°C of ambient temperature.
2. Ripple & noise are measured at 20MHz of bandwidth by using a 12" twisted pair-wire terminated with a 0.1uf parallel capacitor.
3. Please see DIP switch table.
5. Length of set up time is measured at first cold start. Turning the power supply ON/OFF may lead to increase of the set up time.
4. Efficiency is measured at 900mA/67V output set by DIP switch.
5. No load power consumption <1W is measured at 180~277VAC, with lighting fixture connected and output current dimmed to 0%.
6. The lower supply is considered as a component that will be operated in combination with final equipment. Since EMC performance will be affected by the complete
7 installation, the final equipment manufacturers must re-qualify EMC Directive on the complete installation again.
8. To fulfill requirements of the latest ErP regulation for lighting fixtures, this LED power supply can only be used behind a switch without permanently connected to the mains.

Sunpower Technology LLP Orion House, Calleva Park, Aldermaston, Berkshire RG7 8SN Tel: +44 (0)118 981 1001 • E-mail: sales@sunpower-uk.com

LCM-60DA Series

60W Multiple-Stage Output Current LED Power Supply

Mechanical Specification

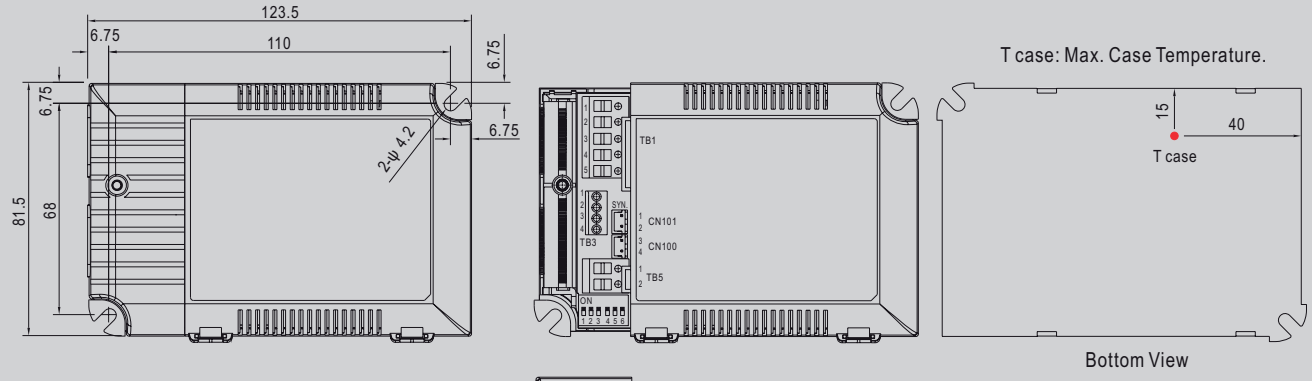

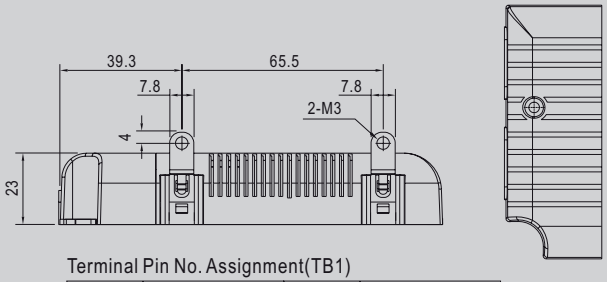

Terminal Pin No. Assignment(TB3)

Pin No.	Assignment	Pin No.	Assignment
1	+FAN	3	+NTC
2	-FAN	4	-NTC

Terminal Pin No. Assignment(TB5)

Pin No.	Assignment
1	+Vo
2	-Vo

Terminal Pin No. Assignment(TB1)

Pin No.	Assignment	Pin No.	Assignment
1	AC/L	4	DA+
2	AC/N	5	DA-
3	PUSH		

SYN. Connector(CN101/CN100):JST B2B-XH or equivalent

Pin No.	Assignment	Mating Housing	Terminal
1,3	+	JST XHP or equivalent	JST SXH-001T-P0.6 or equivalent
2,4	–		

PFC fosc : 60KHz
PWM fosc : 80KHz

Block Diagram

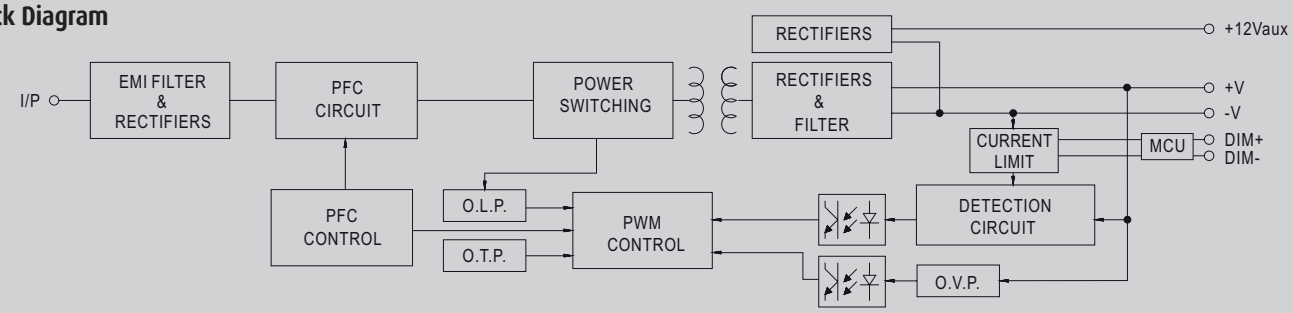

Derating Curve

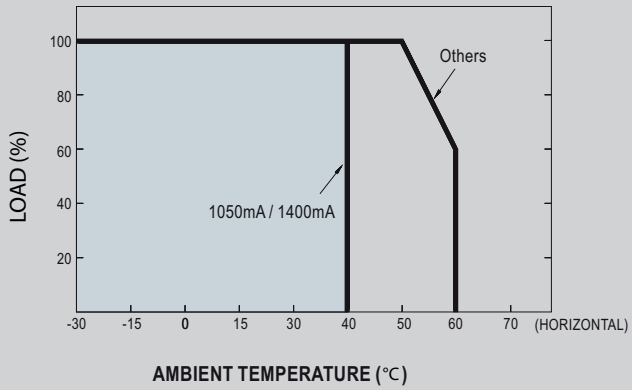

Static Characteristics

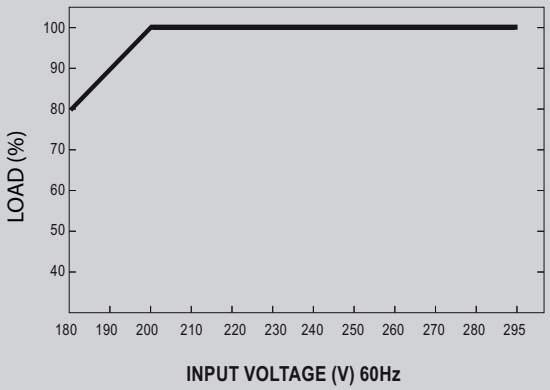

Sunpower Technology LLP Orion House, Calleva Park, Aldermaston, Berkshire RG7 8SN Tel: +44 (0)118 981 1001 • E-mail: sales@sunpower-uk.com

LCM-60DA Series

60W Multiple-Stage Output Current LED Power Supply

DIP Switch Table

LCM-60DA is a multiple-stage output current supply, selection of output current through DIP switch as table below.

Io \ DIP S.W.	1	2	3	4	5	6
500mA	----	----	----	----	----	----
600mA	ON	----	----	----	----	----
700mA(Factory Setting)	ON	ON	----	----	----	----
900mA	ON	ON	ON	----	----	ON
1050mA	ON	ON	ON	ON	----	ON
1400mA	ON	ON	ON	ON	ON	ON

Power Factor Characteristic

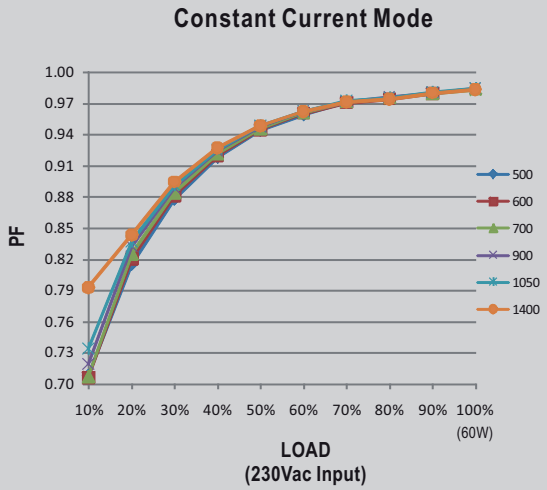

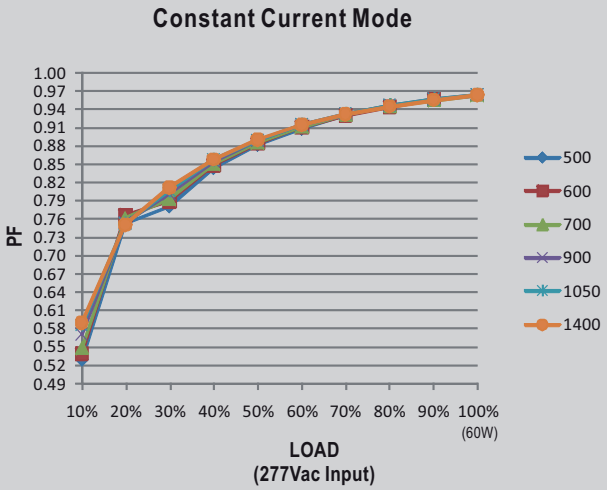

Efficiency vs Load

LCM-60DA series possess superior working efficiency that up to 92% can be reached in field applications.

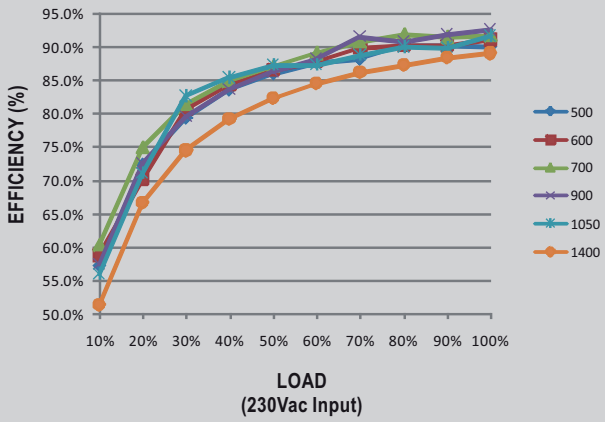

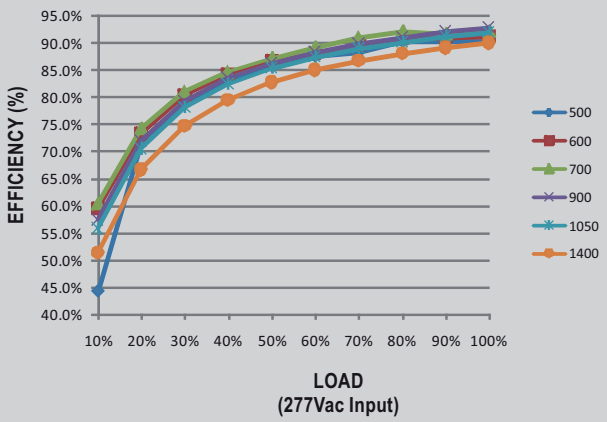

Dimming Operation

PUSH dim(primary side)

Ignore	To avoid reaction on AC spike	<0.05 sec.
Short push	Push to turn ON-OFF	0.1~1 sec.
Long push	Dimming up or down	1.5~10 sec.
Reset push	Setting light to 100%	>11 sec.

- Maximum number of drivers up to 10 pcs.
- Maximum length of the cable, from push button to last driver is 20 meter.
- Factory setting at 100%.
- When the light is lower than 10% it will always dim up, or when the light output is higher than 90% it will always dim down.

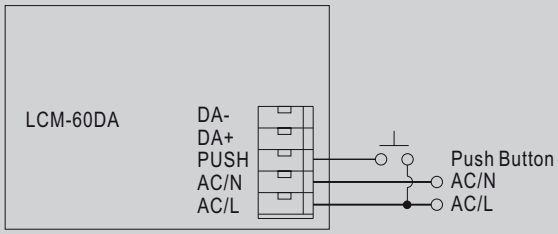

Warning: The pushbutton can only be connected in between the PUSH terminal of LCM-60DA and AC/L (brown or black color). It would cause short circuit if it is connected to AC/N.

DALI interface(primary side)

- DALI protocol including 16 groups and 64 addresses.
- First step is fixed at 6% of output.

Synchronization Operation

- 10 drivers(max.) synchronization (1 master + 9 slaves)
- Maximum cable length between each units : 20 meter.

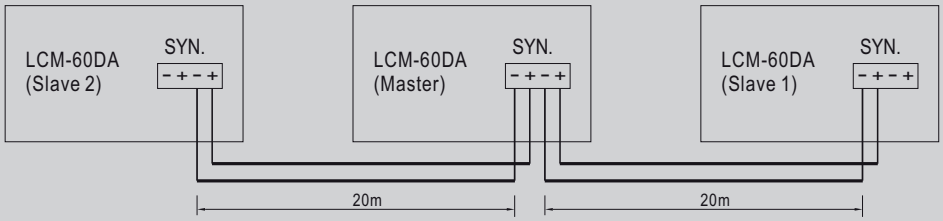

Temperature Compensation Operation

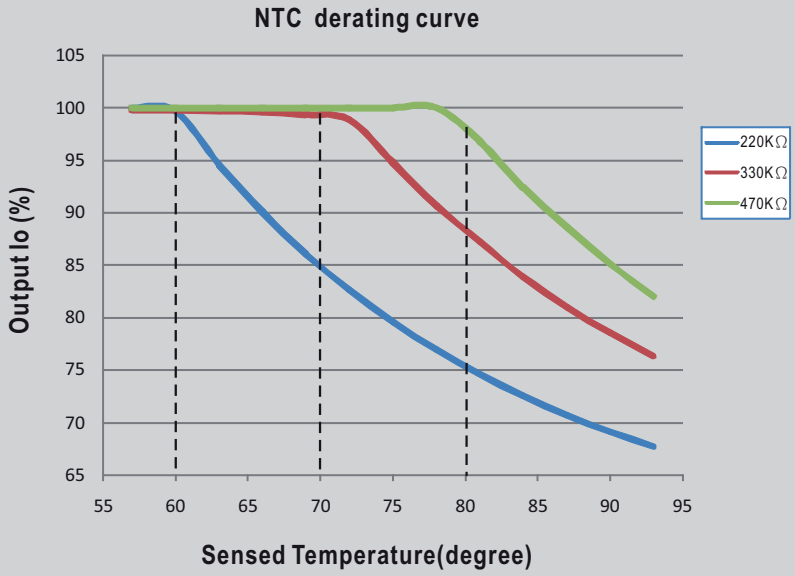

LCM-60DA have the built-in temperature compensation function (T ↑ ,Io ↓). By connecting a temperature sensor (NTC resistor) between the NTC +/- terminal of LCM-60DA and the detecting point on the lighting system or the surrounding environment, output current of LCM-60DA could be correspondingly changed to ensure the long life of LED.

1.LCM-60DA can still be operated well when the NTC resistor is not connected and the value of output current will be the current level that you set through the DIP switch.

2.

NTC resistance	Output Current
220K	< 60°C, 100% of the rated current (corresponds to the setting current level) > 60°C, output current begin to reduce, details please refer to the curve.
330K	< 70°C, 100% of the rated current (corresponds to the setting current level) > 70°C, output current begin to reduce, details please refer to the curve.
470K	< 80°C, 100% of the rated current (corresponds to the setting current level) > 80°C, output current begin to reduce, details please refer to the curve.

Notes: 1. MW does not offer the NTC resistor and all the data above are measured by using THINKING TTC03 series.
2. If other brands of NTC resistor is applied,please check the temperature curve first.
3. Synchronization function of the power supply will be invalid when the" temperature compensation function" is in use.